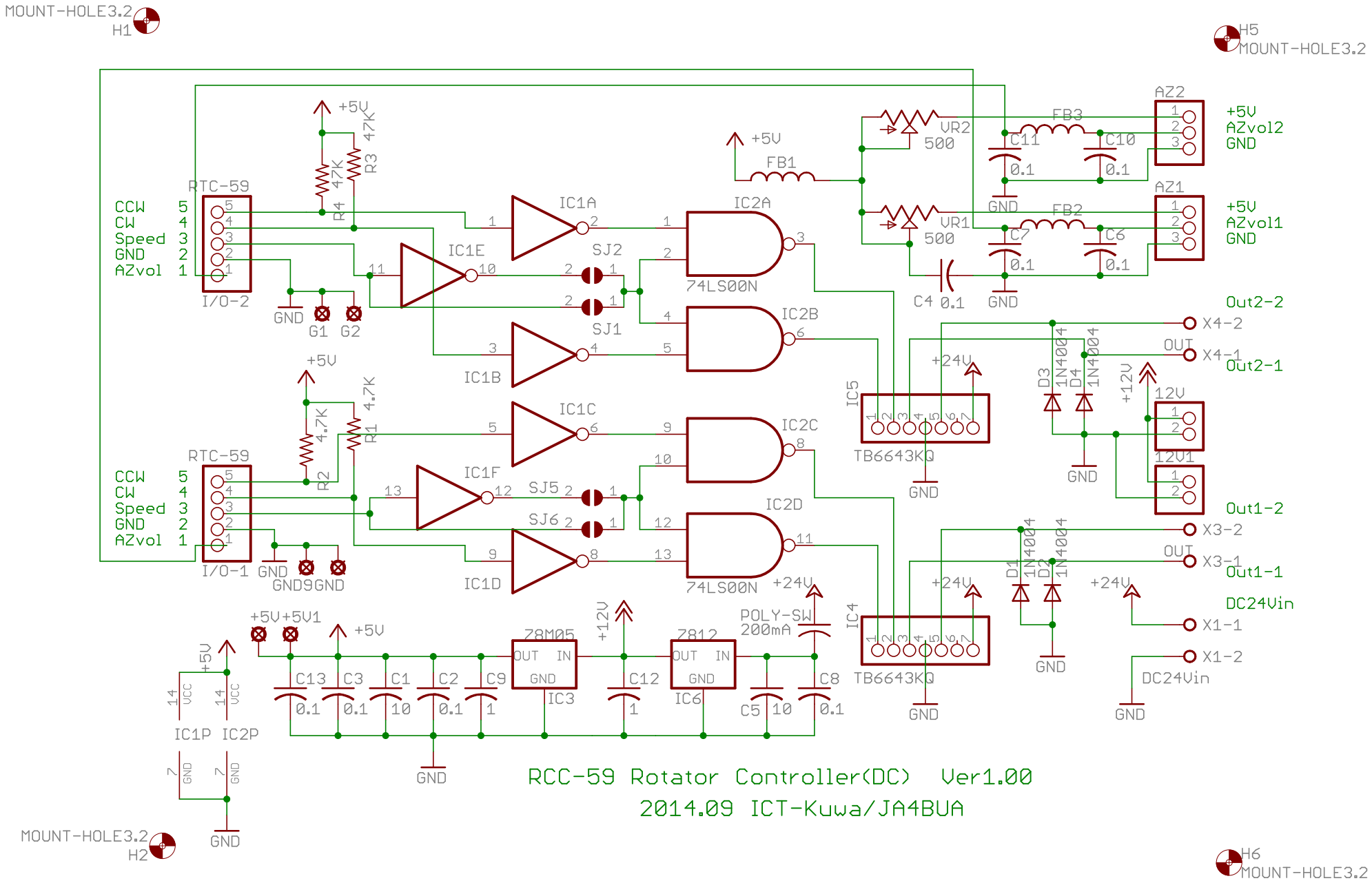

RCC-59 Rotator Controller(DC) Ver1.00

2014.09 ICT-Kuwa/JA4BUA